XV55

55KW 440VAC XP TRACTION MOTOR

SAMINCO
ELECTRIC TRACTION DRIVES

Power Rating	Voltage	Phase	Frequency	Model Number
75HP/55kW	440	3	50Hz	M6005-010
Current	RPM	Duty	Frame	Serial Number
93A	1478	1-Hour	15190 C	
Temp Rise	Ins	Enclosure	MSHA Approval No	
120ºC	H	T.E.XP	07-JA05 0005-0	

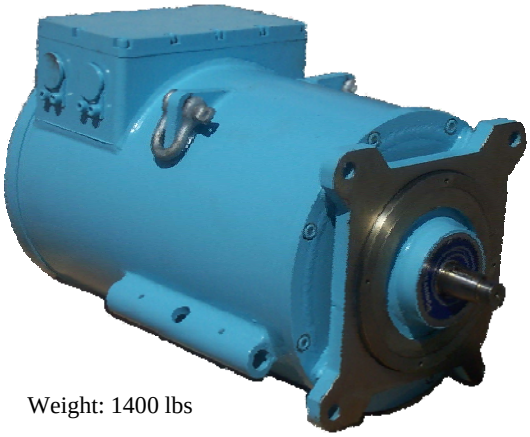

Weight: 1400 lbs

SAMINCO Part Number: **M6005-010**

55kW 440VAC 1478RPM

MSHA Approval number: **07-JA050005-0**
Enclosure: **TEXP, Explosion Proof**
Duty Rating: **1 hour**
Insulation: **H**

- MSHA approved Explosion proof AC traction motor
- Designed as a drop-in replacement for the 41J9 30HP DC traction motor
- Designed for use with the Saminco VF1-75 Variable Frequency Drive
- Capable of up to 300% nominal torque output
- Insulation system resistant to repeat transients and designed for excellent heat transfer
- Custom manufactured for Saminco
- Low-loss Copper-Barred rotor
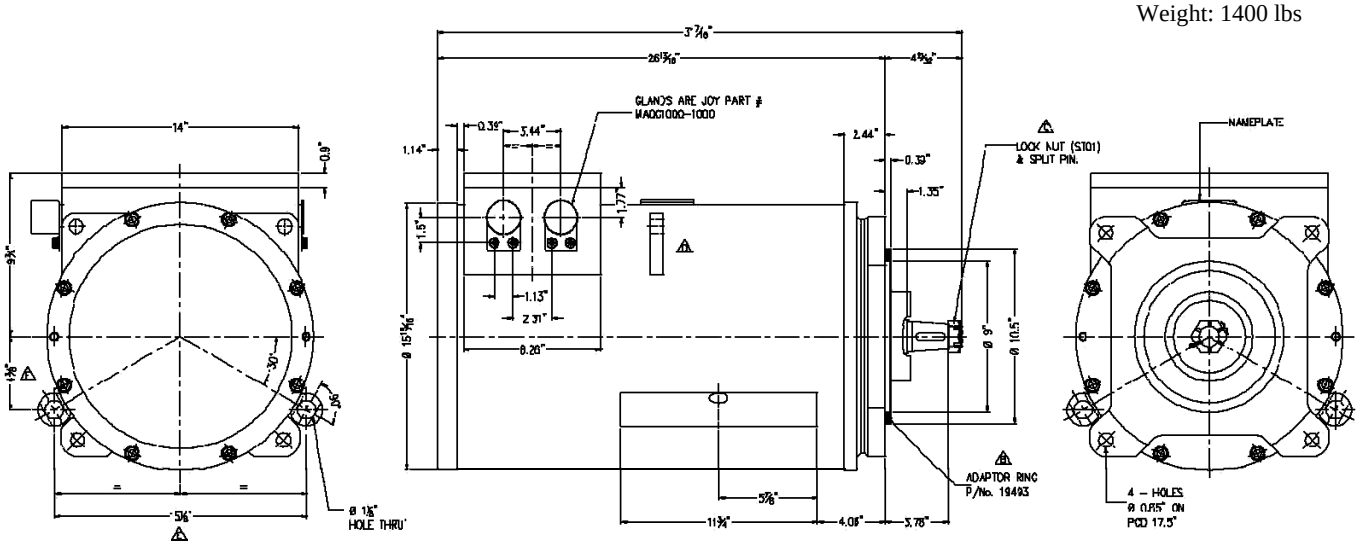
Weight: 1400 lbs